Operating Manual

Alpha 10X



DMAN-00IM-1762_Rev.F - 02/2025

DIGITAL MULTIFUNCTION INSTRUMENT

Programmable Multi-function Digital Panel Meter
Installation & Operating Instructions

Section Contents

1. Introduction
2. Measurement Reading Parameters
3. Programming
   - 3.1 Password Protection
   - 3.2 Menu Selection
     - 3.2.1 System Parameter Selection Screen
       - 3.2.1.1 System Type
       - 3.2.1.2 Potential Transformer Primary Value
       - 3.2.1.3 Potential Transformer Secondary Value
       - 3.2.1.4 Current Transformer Primary Value
       - 3.2.1.5 Current Transformer Secondary Value
       - 3.2.1.6 Noise Cutoff
       - 3.2.1.7 Demand Integration Time
       - 3.2.1.8 Auto Scrolling
       - 3.2.1.9 No. of Poles Selection
     - 3.2.2 Communication Parameter Selection Screen
       - 3.2.2.1 Address Setting
       - 3.2.2.2 RS 485 Baud Rate
       - 3.2.2.3 RS 485 Parity Selection
     - 3.2.3 Reset Parameter Selection Screen
       - 3.2.3.1 Resetting Parameter
     - 3.2.4 Output Option Selection Screen (Menu)
       - 3.2.4.1 Configuration of Output
         - 3.2.4.1.1 Relay Output Selection Menu
           - 3.2.4.1.1.1 Limit output
             - 3.2.4.1.1.1.1 Assignment of Limit Output to Parameter
             - 3.2.4.1.1.1.2 Limit Configuration Select
             - 3.2.4.1.1.1.3 Trip point selection

3.2.4.1.1.1.4 Hysteresis selection
3.2.4.1.1.1.5 Energizing delay time
3.2.4.1.1.1.6 De-energizing delay time
3.2.5 Quit screen
4. Run-Hour
5. On-Hour
6. Number of Interruption
7. Negative Sign Indication
8. Relay Output
8.1 Limit Switch
9. RS 485 (ModBus) Output
9.1 User Assignable Modbus Register
10. Phasor Diagram
11. Installation
11.1 EMC Installation Requirements
11.2 Case Dimensions and Panel Cut-out
11.3 Wiring
11.4 Auxiliary Supply
11.5 Fusing
11.6 Earth / Ground Connections
12. Connection Diagrams
13. Specification

1. Introduction

The Multifunction Meter is a panel mounted 96 x 96mm DIN Quadratic Digital Panel Meter, which measures important electrical parameters in 3P4W, 3P3W, 1P3W (Split Phase) and 1P2W networks and replaces the multiple analog panel meters. It measures electrical parameters like AC Voltage, Current, Frequency, Power Factor, The instruments comes with 3 Line 4 Digits ultra bright LED display with clearly visible annunciated units with bright LED Indications. The Multifunction Meter can be configured & programmed on site for the following: PT Primary, PT Secondary, CT Primary, CT Secondary & System Type (P4W/3P3W/1P3W/1P2W).
The front panel has two Keys for user interface to scroll through the available parameters. The function of the up and down keys are explained in the following page.



1. ⇧ :- UP Key scrolls through L1 Voltage, L2 Voltage, L3 Voltage, L12 Voltage, L23 Voltage, L31 Voltage, L1 Current, L2 Current, L3 Current, Neutral Current, System RPM, System Frequency, L1 Power Factor, L2 Power Factor, L3 Power Factor, System Voltage, System Current, System Power Factor, Maximum System Voltage, Maximum System Current, Minimum System Voltage, Minimum System Current, Run hour, On hour, Number of Interruptions and back to L1 Voltage.

2. ⇩ :- DOWN Key scrolls in the reverse direction

The Multifunction meter comes with 14mm display and units annunciated from back side, which enables to take reading from long distance. The problem with conventional LED annunciators is also overcome in this Multifunction meter.

2. Measurement Parameters

TABLE 1: Measured Parameters

√: Available x : Not Available

Sr. No.	Parameter	3 Phase 4 Wire	3 Phase 3 Wire	1 Phase 2 Wire	1 Phase 3 Wire
1	System Voltage	✓	✓	✓	✓
2	System Current	✓	✓	✓	✓
3	Voltage L1	✓	✗	✗	✓
4	Voltage L2	✓	✗	✗	✓
5	Voltage L3	✓	✗	✗	✗
6	Voltage L12	✓	✓	✗	✓
7	Voltage L23	✓	✓	✗	✗
8	Voltage L31	✓	✓	✗	✗
9	Current L1	✓	✓	✗	✓
10	Current L2	✓	✓	✗	✓
11	Current L3	✓	✓	✗	✗
12	Frequency	✓	✓	✓	✓
13	System Power Factor	✓	✓	✓	✓
14	Power Factor L1	✓	✗	✗	✓
15	Power Factor L2	✓	✗	✗	✓
16	Power Factor L3	✓	✗	✗	✗
17	RPM	✓	✓	✓	✓
18	Min and Max System Voltage	✓	✓	✓	✓
19	Min and Max System Current	✓	✓	✓	✓
20	Run Hour	✓	✓	✓	✓
21	On Hour	✓	✓	✓	✓
22	Number of interruptions	✓	✓	✓	✓
23	Neutral Current	✓	✗	✗	✗

Setup Parameter Screens

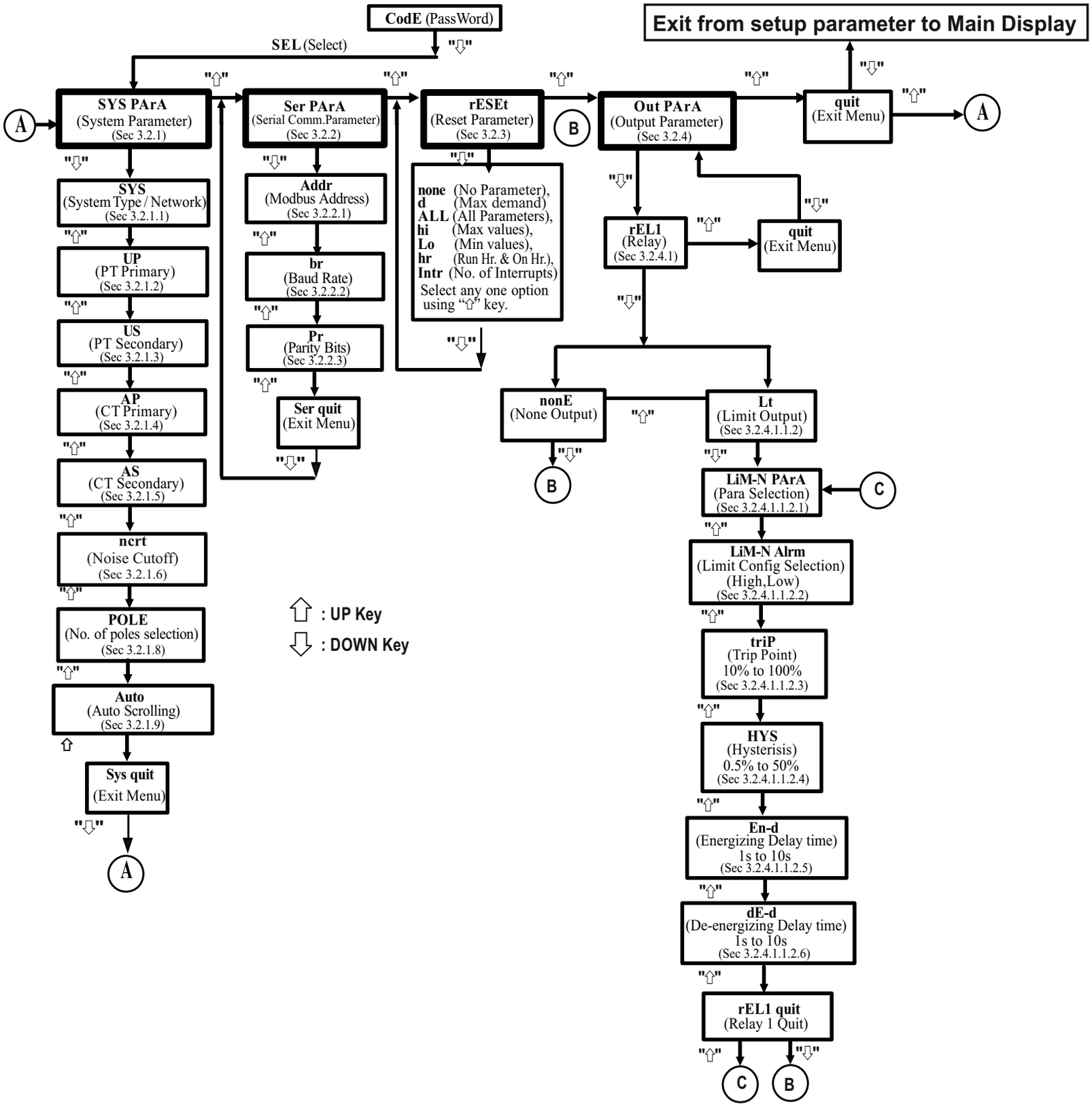

3. Programming

The following sections comprise step by step procedures for configuring the Multifunction Meter for individual user requirements.
To access the set-up screens press and hold the "⇧" and "⇩" key simultaneously for 5 seconds. This will take the user into the password protection entry stage (section 3.1).

3.1. Password Protection

Password protection can be enabled to prevent unauthorised access to set-up screens, by default password protection is not enabled. Password protection is enabled by selecting a four digit number other than 0000, setting a password of 0000 disables the password protection.



Enter Password, prompt for first digit. (Blinking digit denotes that value will be changing). Press the "⇧" key to scroll the value of first digit from 0 through to 9, the value will wrap from 9 round to 0. Press the "⇩" key to advance to next digit. In special case where the Password is "0000" pressing the "⇩" key when prompted for the first digit will advance to "Password confirmed" screen.



Enter Password, first digit entered, prompt for second digit. (Blinking digit denotes that value will be changing).

Use the "⇧" key to scroll the value of the second digit from 0 through to 9.
the value will wrap from 9 round to 0. Press the "⇩" key to advance to next digit. Enter Password,



second digit entered, prompt for third digit. (Blinking digit denotes that value will be changing). Use the "⇧" key to scroll the value of the third digit from 0 through to 9, the value will wrap from 9 round to 0.
Press the "⇩" key to advance to next digit. Enter Password, third digit entered, prompt for fourth digit. (Blinking digit denotes that value will be



changing).Use the "⇧" key to scroll the value of the fourth digit from 0 through to 9, the value will wrap from 9 round to 0. Press the "⇩" key to advance to verification the Password.



Enter Password, fourth digit entered, awaiting verification of the password.

Password confirmed.



Pressing "⇧" key will advance to the "New/Change Password" entry stage. Pressing the "⇩" key will advance to the menu selection screen. (See Section 3.2).

Password Incorrect.



The meter has not accepted the password entered. Pressing the "⇧" key will return to the enter password stage. Pressing the "⇩" key exits the password menu & returns operation to the measurement reading mode.

New / Change Password



(Blinking digit denotes that value will be changing) Pressing the "⇧" key will scroll the value of the first digit from 0 through to 9, the value will wrap from 9 round to 0.

Pressing the "⇩" key to advance the operation to the next digit and sets the first digit, in this case to "2"



New/Change Password, first digit entered, prompting for second digit. (Blinking digit denotes that value will be changing). Pressing the "⇧" key will scroll the value of the second digit from 0 through to 9, the value will wrap from 9 round to 0.

Pressing the "⇩" key to advance the operation to the next digit and sets the second digit, in this case to "1"



New / Change Password, second digit entered, prompting for third digit. (Blinking digit denotes that value will be changing). Pressing the "⇧" key will scroll the value of the third digit from 0 through to 9, the value will wrap from 9 round to 0.

Pressing the "⇩" key to advance the operation to the next digit and sets the third digit, in this case to "5"



New/ Change Password, third digit entered, prompting for fourth digit. (Blinking digit denotes that value will be changing). Pressing the "⇧" key will scroll the value of the fourth digit from 0 through to 9, the value will wrap from 9 round to 0. Pressing the "⇩" key to advance the operation to the new password confirmed" & sets the fourth digit in this case to "3".

New Password Confirmed



Pressing the "⇧" key will return to the "New/Change Password ".
Pressing the "⇩" key will advances to the Menu Selection screen (See Section 3.2).

3.2 Menu Selection

3.2.1 System Parameter Selection Screen



This screen is used to select the different system parameter like "System Type", "CT Ratio", "PT Ratio", pressing the " ⇩" key allows the user to set different system parameters (See Section 3.2.1.1 to 3.2.1.7).
Pressing the "⇧" key will advance to Communication Parameter Selection screen (See Section 3.2.2).

3.2.2 Communication Parameter Selection Screen



This screen is used to select the different communication parameters like "Address ", "RS485 Parity" and "RS485 Baudrate".
Pressing the "⇩" key allows the user to set different communication parameters. (See Section 3.2.2.1 to 3.2.2.3). Pressing the "⇧" key will advance to Reset Parameter screen. (See Section 3.2.3).

3.2.3 Reset Parameter Selection Screen



This screen is used to reset the different parameters.
Pressing the "⇩" key allows the user to reset different system parameters (See Section 3.2.3.1).
Pressing the "⇧" key will advance to Output Option Selection screen (See Section 3.2.4).

3.2.4 Output Option Selection Screen



This screen will allow the user to select output option like "Relay" Output.
Pressing the "⇩" key allows the user to select & configure the output option (See Section 3.2.4.1). Pressing the "⇧" key will advance to Quit screen. (See Section 3.2.5)

3.2.5 Quit Screen



This screen will allow the user to quit the menu pressing the "⇩" key will allow the user to quit from menu & return to measurement screen.
Pressing the "⇧" key will advance to System Parameter selection screen (See Section 3.2.1).

3.2.1 System Parameters Selection

3.2.1.1 System Type



This screen is used to set the System Type 3P4W, 3P3W, 1P3W & 1P2W.
Pressing the "⇧"key advances to the "Potential Transformer Primary Value" screen (See Section 3.2.1.2).

Pressing the "⇩" key will enter the System Type edit mode & further pressing of "⇧" scroll the values through values available.
Pressing the "⇩" key again sets the displayed value and pressing "⇧" key will advance to "Potential Transformer Primary Value" screen. (See section 3.2.1.2)

3.2.1.2 Potential Transformer Primary Value

The nominal full scale voltage which will be displayed as the **Line to Line** voltages for all system types. The values displayed represent the voltage in **kilovolts** (note "K" annunciator).



Pressing the "⇧" key advances to the "Potential Transformer Secondary Value" screen (See Section 3.2.1.3).

Pressing the "⇩" key will enter the Potential Transformer Primary Value edit mode.

Initially the "multiplier must be selected, pressing the "⇧" key will move the decimal point position to the right until it reaches # # #.# after which it will return to #. # # #.
Pressing the "⇩" key accepts the present multiplier (decimal point position) and advances to the Potential Transformer Primary digit edit mode.

Note: PT Values must be set as Line to Line Voltage for Primary as well as Secondary for all System Types (3P3W/3P4W/1P3W/1P2W).



Pressing the "⇧" key will scroll the value of the most significant digit from 0 through to 9.

Pressing the "⇩" key accepts the present value at the cursor position and advances the cursor to the next less significant digit.

The PT Primary value can be set from 100 VL-L to 1200 kVL-L.
Note: The flashing decimal point indicates the cursor position, a steady decimal point will be present to identify the scaling of the number until the cursor position coincides with the steady decimal point position. At this stage the decimal point will flash.

When the least significant digit has been set pressing the “⇩” key will advance to the Potential Transformer Primary Value confirmation stage.
Screen showing display of 0.120 kV i.e. 120 Volts indicating steady decimal point and cursor flashing at the “hundreds of volts” position.
If the scaling is not correct, pressing the “⇧” key will return to the “Potential Transformer Primary digits flashing indicating Value Edit” stage with that multiplier (decimal point position) should be selected.

Pressing the “⇩” key sets the displayed value and will advance to the “Potential Transformer Secondary Value” screen (See Section 3.2.1.3).

3.2.1.3 Potential Transformer Secondary Value

The value must be set to the nominal full scale secondary voltage which will be obtained from the Transformer when the potential transformer (PT) primary is supplied with the voltage defined in 3.2.1.2 potential transformer primary voltage.
The ratio of full scale primary to full scale secondary is defined as the transformer ratio.
The PT Secondary value can be set from 100VL-L to 500VL-L.



Pressing the “⇧” key advances to the Current Transformer Primary Value” screen (See Section 3.2.1.4).

Pressing the “⇩” key will enter the Potential Transformer Secondary Value edit mode.

Pressing the “⇩” key accepts the present value at the cursor position and advances the cursor to the next . less significant digit

If the scalling is not correct, pressing the “⇧” key will return to the “Potential Transformer Secondary Value Edit screen.
Pressing the “⇩” key sets the displayed value and “⇧” key will advance to the "Current Transformer Primary Value" screen (See Section 3.2.1.4).

3.2.1.4 Current Transformer Primary Value

The nominal Full Scale Current that will be displayed as the Line currents. This screen enables the user to display the Line currents inclusive of any transformer ratios, the values displayed represent the Current in Amps.

Pressing the “⇧” key advances to the Current Transformer Secondary Value” screen (See Section 3.2.1.5).



Pressing the “⇩” key will enter the Current Transformer Primary Value edit mode. This will scroll the value of the most significant digit from 0 through to 9

Pressing the “⇩” key will advance to the next less significant digit. (* Denotes that decimal point will be flashing).

The minimum value allowed is 1, the value will be forced to 1 if the display contains zero when the “⇩” key is pressed.
If the scaling is not correct, Pressing the “⇧” key will return to the Current Transformer Primary Value edit stage with the most significant digit highlighted (associated decimal point flashing) and the bottom line of the display will be blanked.

The CT Primary value can be set from 1A to 9999A.

3.2.1.5 Current Transformer Secondary Value



This screen is used to set the value for Current Transformer Secondary value, “5” for 5A or “1” for 1A can be selected. Pressing “⇧” key advances to the Demand Integration Time (See Section 3.2.1.6).

Pressing the “⇩” key will enter the CT Secondary value edit mode and pressing the “⇧” key scroll the value through the values available.
Pressing “⇩” key sets the displayed value and “⇧ key” will advance to “Noise Cutoff” screen (See Section 3.2.1.6).

3.2.1.6 Noise cutoff



This screen allows the user to set Low noise current cutoff in mA. Pressing "⇧" key advances to the Auto scrolling.

Pressing "⇩" will enter into the Noise Cutoff selection edit mode.

3.2.1.7 Auto Scrolling



This screen allows user to enable screen scrolling. Pressing ”⇧” key advance to the No. of Poles Selection screen (See Section 3.2.1.8).



Pressing the “⇩” key will enter the Auto Scrolling Screen edit mode and toggle the status ‘Yes’ and ‘No’.
Pressing the “⇩” key will select the status displayed and “⇧” key advance to the No. of Poles Selection screen (Section 3.2.1.9).

3.2.1.8 No. of Poles Selection

This screen enables to set No. of poles of a Generator of which RPM is to be measured and to which the instrument is connected to monitor its parameters.



Pressing “⇧” key returns to System Type Selection screen (See section 3.2.1.1).
Pressing the “⇩” key will enter the No. of Poles selection edit mode.

Pressing “⇧” key scroll the number from 02 to 40 in step of 2. After 40 it scrolls the number again to 02.
Pressing “⇩” key set the number on screen as number of poles of generator & “⇧”key advance to System exit selection menu.

3.2.2 Communication Parameter Selection

3.2.2.1 Address Setting



This screen applies to the RS 485 output only. This screen allows the user to set RS 485 parameter for instruments.

The range of allowable address is 1 to 247. Enter Address, prompt for first digit.

Press the "⇧" key to scroll the value of the first digit.

Press the "⇩" key to advance to next digit.



Enter Address, first digit entered, prompt for second digit. (Blinking digit denotes that value will be changing).
Use the "⇧" key to scroll the value of the second digit.



Enter Address, second digit entered, prompt for third digit. (Blinking digit denotes that value will be changing).
Use the "⇧" key to scroll the value of the third digit.



Enter Address for third digit.
Press the "⇧" key to advance to next Screen "RS485 Baud Rate" (See Section 3.2.2.2).
Pressing the "⇩" key will re-enter the Address edit mode.

3.2.2.2 RS 485 Baud Rate



This screen allows the user to set Baud Rate of RS 485 port. The values displayed on screen are in kbaud.
Pressing "⇧"key advance to the Parity Selection screen (See Section 3.2.2.3).

Pressing the "⇩" key will enter the Baud Rate edit mode and pressing "⇧" key will scroll the value through 4.8, 9.6, 19.2, 38.4, 57.6 & back to 4.8.

Pressing the "⇩" key will select the value pressing "⇧" key it advances to the Parity Selection screen (See Section 3.2.2.3).

3.2.2.3 RS 485 Parity Selection

This screen allows the user to set Parity & Number of Stop Bits of RS 485 port.



Pressing "⇧" keys advances to Serial Parameter Quit screen.
Pressing the "⇩" key will enter the Parity & Stop Bit edit mode & pressing "⇧" key scroll the value available.
odd : odd parity with one stop bit
no 1 : no parity with one stop bit
no 2 : no parity with two stop bit
E : even parity with one stop bit



Pressing the "⇩" key will set the value.

Pressing the "⇧" key again will jump to the Serial parameter Quit screen.



Reset option "Lo" select: (Reset Min parameters). Pressing "⇩" key will select the value and advance to the reset all Low parameters.

3.2.3 Reset Parameter Selection

3.2.3.1 Resetting Parameter

The following screens allow the users to reset Max demand parameters, Lo (Min) / Hi (Max) values of voltage & current , Run hour, On hour, No. of Interrupts, & all the parameters



Reset "None" select: Pressing "⇩" key advances to Reset Parameter selection screen (See Section 3.2.3). Pressing the "⇧" key will enter the Reset option mode & scroll through parameter and wrapping back to none.



Reset option "hr" select: (Reset ON Hour & Run Hour). Pressing "⇩" key will select the value and will reset On hour & Run Hour.



Reset option "d" select: (Reset Max Demand parameters) Pressing "⇩" key will select the value and resets all Max Demand parameters.



Reset option "Intr" select: (Reset Number of Interrupt) Pressing "⇩" key will select the value and will reset number of auxiliary supply interruption count.



Reset option "hi" select: (Reset Max parameters) Pressing "⇩" key will select the value and resets all Max parameters.



Reset option "All" select: (Resets ALL resettable parameter) Pressing "⇩" key will select the value and advance to the reset ALL parameters.

3.2.4. Output Option Selection Menu

3.2.4.1 Configuration of Output



This screen applies to the Relay Output option Selection.

Pressing "⇩" key will select the rEL1 Output Selection Screen(See Section3.2.4.1.1).

Pressing the "⇧" key will advance to the Quit screen.



This screen allows the user to quit the output option

Pressing "⇩" key will advance to the Output Parameter selection (See section 3.2.4)

Pressing the "⇧" key will go back to Relay output option (See section 3.2.4.1).

3.2.4.1.1 Relay output Selection Menu

3.2.4.1.1.1 Limit Output



This screen is used to assign Relay in limit output mode.

Pressing "⇩" key will assign Limit output mode (See Section 3.2.4.1.1.1.1).

Pressing the "⇧" key will scroll through Limit or None None Option.

if None option Selected then the relay will not assigne to any parameter

3.2.4.1.1.1.1 Assignment of Limit Output to Parameter

This screen is for Limit output mode selection. It allows the user to set Limit output corresponding measured value. Refer Table 2 "Parameter for Limit Output" for assignment.



Pressing "⇧" key advance to the Limit Configuration Selection screen (See Section 3.2.4.1.1.1.2). Pressing the "⇩" key will enter the Limit Output edit mode. Pressing the "⇧" scroll the values, as per Table 2: "Parameter for Limit Output".

Pressing the "⇩" key sets the displayed value & pressing "⇧" key will advance to the Limit Configuration Selection screen (See Section 3.2.4.1.1.1.2).

3.2.4.1.1.1.2 Limit Configuration Select

This screen is used to set the Limit Configuration, four different types of configuration can be selected:



Hi - E (High Alarm & Energized Relay)

Hi - d (High Alarm & De-Energized Relay)

Lo - E (Low Alarm & Energized Relay)

Lo - d (Low Alarm & De-Energized Relay)

(For detail refer to section 8.1).

Pressing the "⇧" key advances to the "Trip point selection" screen (See Section 3.2.4.1.1.1.3).

Pressing the "⇩" key will enter the Limit Configuration edit mode and pressing the "⇧" key will scroll through the modes available.

3.2.4.1.1.1.3 Trip Point Selection

This screen applies to the Trip Point Selection. This screen allows the user to set Trip point for the meter.



The allowable range for High Alarm and Low Alarm can be referred from table 2. Enter value, prompt for first digit. (Blinking digit denotes that value will be changing).

Press the "⇧" key to scroll the values of the first digit. Press the "⇩" key to advance to next digit.



The first digit entered, prompt for second digit (Blinking digit denotes that value will be changing).Use the "⇧" key to scroll the value of the second digit.

Press the "⇩" key to advance to next digit.



The second digit entered, prompt for third digit (Blinking digit denotes that value will be changing). Use the "⇧" key to scroll the value of the third digit.



Entered the value for third digit. Press the "⇧" key to advance to next Screen "Hysteresis selection" (see section 3.2.4.1.1.1.4) Pressing the "⇧" key will return in edit mode.

3.2.4.1.1.1.4 Hysteresis selection

This screen applies to the Hysteresis selection.



This screen allows the user to set Hysteresis for relay output The allowable range is 0.5% to 50 % of Trip point. Enter value, prompt for first digit. (Blinking digit denotes that value will be changing Press the "⇧" key to scroll the value of the first digit Press the "⇩" key to advance to next digit. **Hysteresis for Frequency** is calculated as % of trip point span from 40Hz. e.g. If trip point is 50%(55Hz) and hysteresis is set to 10%, then relay will reset at 53.5Hz [10% of (55 - 40Hz) 15Hz is 1.5Hz. Hence, 55 -1.5= 53.5Hz

Note : In case of lo alarm if trip point is set at 100% then maximum 20% Hysterisis can be set.



The first digit entered, prompt for second digit Blinking digit denotes that value will be changing). Use the "⇧" key to scroll the value of the second digit. Press the "⇩" key to advance to next digit



The second digit entered, prompt for third digit (Blinking digit denotes that value will be changing).Use the "⇧" key to scroll the value of the third digit.



Entered value for third digit.

Press the "⇧" key to advance to next Screen Energizing delay time" (3.2.4.1.1.1.5).

3.2.4.1.1.1.5 Energizing Delay Time

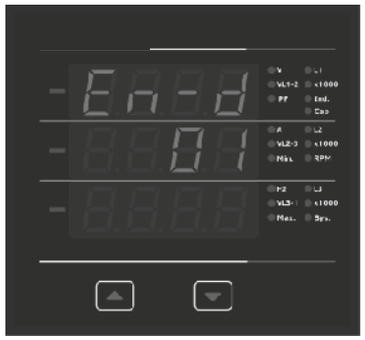

This screen allows the user to set Energizing Delay Time in seconds for Relay Limit assigned parameters Pressing "⇧" key advances to De-energizing delay screen.

Pressing the "⇩" key will enter the Energizing Delay edit mode and pressing the "⇧"key scroll the value through 1 to 10.
Pressing "⇩" key set displayed value & "⇧" key will advance to De-energizing Delay Time screen (See Section 3.2.4.1.1.1.6).
Pressing the "⇩" key will re-enter the Energizing delay edit mode.

3.2.4.1.1.1.6 De-Energizing Delay Time

This screen allows the user to set De-Energizing Delay time in seconds for Relay Limit Assigned Parameters .



Pressing "⇩" key accepts the present value and "⇧" key advance to Configuration of output. (See section 3.2.4.1) Pressing the "⇧" key will enter the "De-Energizing Delay" Edit mode and scroll the "Value" through 1 to10.

Pressing "⇩" key set displayed value & will advance to Configuration of output. (See section 3.2.4.1)

4. Run Hour



This screen shows the total no. of hours the load was connected. Even if the auxiliary supply is interrupted count of Run hour will be maintained in internal memory & displayed in the format "hours.min".

For example if displayed count is 105000.10 r-H it indicates 105000 hours & 10 minutes.
After 999999.59 run hours display will restart from zero. To reset run hour manually see Section Resetting Parameter 3.2.3.1

5. On Hour



This screen shows the total no. of hours the auxiliary supply was "ON". Even if the Auxiliary supply is interrupted count of On hour will be maintained in internal memory & displayed in the format "hours. min".

For example if displayed count is 005000.10 On-H it indicates 005000 hours and 10 minutes.
After 999999.59 On hours display will restart from zero. To reset On hour manually see Section Resetting Parameter 3.2.3.1

6. Number of Interruption



This screen displays the total no. of times the auxiliary supply was interrupted. Even if the auxiliary supply is interrupted count will be maintained in internal memory. To reset No of Interruption manually see Section Resetting Parameter 3.2.3.1

7. Negative Sign Indication

If the segment glows, it indicates negative sign of displayed parameter.



When Power factor lies in second and third quadrant, it has -'ve sign, so active power has -'ve sign as shown in the phaser diagram. Also in 3rd & 4th quadrant, reactive power is -'ve. So the -'ve annunciator glows to indicate the operation of system in respective mode as per the Phasor diagram shown on page 48. For example in the screen shown, Input values were $240V_{L-N}$, 20A, and phase angle 187^0 hence the phase active power is displayed with -'ve sign.

TABLE 2 : Parameter for Limit Output

Parameter for Limit Relay								
No.	Parameter	3P4W	3P3W	1P2W	1P3W	Trip Point Range		100 % Value
						Hi-En or Hi-DEn	Lo-En or Lo-DEn	
0	None	✓	✓	✓	✓	-	-	-
1	Volts 1	✓	✓	✓	✓	10 - 120 %	10 - 100 %	Vnom (L-N)
2	Volts 2	✓	✓	×	✓	10 - 120 %	10 - 100 %	Vnom (L-N)
3	Volts 3	✓	✓	×	×	10 - 120 %	10 - 100 %	Vnom (L-N)
4	IL1	✓	✓	✓	✓	10 - 120 %	10 - 100 %	Inom
5	IL2	✓	✓	×	✓	10 - 120 %	10 - 100 %	Inom
6	IL3	✓	✓	×	×	10 - 120 %	10 - 100 %	Inom
7	PF1	✓	×	✓	✓	10 - 100 %	10 - 90 %	90 degree
8	PF2	✓	×	×	✓	10 - 100 %	10 - 90 %	90 degree
9	PF3	✓	×	×	×	10 - 100 %	10 - 90 %	90 degree
10	Volts Ave.	✓	✓	×	✓	10 - 120 %	10 - 100 %	Vnom
11	Current Ave.	✓	✓	×	✓	10 - 120 %	10 - 100 %	Inom
12	PF Ave.	✓	✓	×	✓	10 - 100 %	10 - 90 %	90 degree
13	Frequency	✓	✓	✓	✓	10 - 100 %	10 - 90 %	66 Hz
14	VL1-L2	✓	×	×	✓	10 - 120 %	10 - 100 %	Vnom (L-L)
15	VL2-L3	✓	×	×	×	10 - 120 %	10 - 100 %	Vnom (L-L)
16	VL3-L1	✓	×	×	×	10 - 120 %	10 - 100 %	Vnom (L-L)

Note : Parameters 1,2,3 are L-N Voltage for 3P4W,1P3W,1P2W & L-L Voltage for 3P3W.

(1) For Frequency 0% corresponds to 40Hz and 100% corresponds to 70Hz.

(2) For 3P4W , 1P3W and 1P2W the nominal value is V_{L-N} and that for 3P3W is V_{L-L}.

(3) Nominal value for power is calculated from nominal Voltage and current values.

(4) Nominal value is to be considered with set CT/ PT Primary values.

(5) For single phase L1 phase values are to be considered as system values.

8. Relay output (Optional)

8.1 Limit Switch

Limit switch can be used to monitor the measured parameter (Ref.Table:2)in relation with to a set limit. The limit switch can be configured in one of the four mode given below:-

1) Hi alarm & Energized Relay..
2) Hi alarm & De-Energized Relay.
3) Lo alarm & Energized Relay.
4) Lo alarm & De-Energized Relay.

With User selectable Trip point, Hysteresis, Energizing Delay & De-Energizing delay.

With User selectable Trip point, Hysteresis, Energizing Delay & De-Energizing delay.

Hi Alarm

If Hi-Alarm Energized or Hi Alarm De-Energized option is selected then relay will get Energized or De-energized,if selected parameter is greater than or equal to trip point.

Lo Alarm

If Lo-Alarm Energized or Lo Alarm De-Energized option is selected then relay will get Energized or De-energized, if selected parameter is less than or equal to trip point.

Note: For Lo-Alarm configuration, set the values of trip point & Hysteresis such that % trip point + % of Hysteresis should be less than 100%.
For example, if trip point is set 70% then maximum applicable Hysteresis is 42.8%. i.e Trip point 70% (252°) + Hysteres is 42.8% (107.8°) = 359.8°
If total value is greater than the 100% i.e. 360° then relay will not release.

Trip point

Trip point can be set in the range as specified in table 2 of nominal value for Hi-Alarm & 10% to 100 % of nominal value for Lo-Alarm.

Hysteresis

Hysteresis can be set in the range of 0.5% to 50 % of set trip point .
If Hi-alarm Energized or Hi-alarm De-energized is selected then relay will get De-energized or Energized respectively, if set parameter value is less than Hysteresis
Similarly if Lo-alarm Energized or Lo-alarm De-Energized.

Note : In case of low alarm if trip point is set greater than 80% then the maximum hysteresis can be set such that the total Trip point+ Hysteresis(% of trip point value) will not exceed 120% of range.

For example :If trip point is set at 90%, then maximum 33.3% hysteresis should be set such that, [90 + 29.99 (33.3% of 90)] = 120

Energizing Delay

The energizing delay can be set in the range from 1 to 10 sec.

De-Energizing Delay

The De-energizing delay can be set in the range from1 to 10 sec.

Example of Different Configuration

Parameter No. 4 (Current1)
Trip Point = 50%
Hysteresis = 50% of trip point
Energising Delay:2S
De-energising Delay:2S

Example for Phase angle :

If trip point is set 70% then maximum applicable hysteresis is 42.8% i.e. Trip point 70% (252 degree) + Hysteresis 42.8% (107.8 degree) = 359.8 degree. If total value is greater than the 100% i.e. 360 degree then relay will not release.
Example for PF :
For alarm - High & Relay - Energized combination, If trip point is 70% & hysteresis is 30% then trip value = 0.7x90 degree = 63 degree
Tripping PF = cos(63)=0.4539 & hysteresis = 0.3x0.4539=0.136.
Hence, the relay will energize above 0.4539 and de-energize below 0.3179.

Note:
This function will work irrespective of +/- sign. It depends only on value.

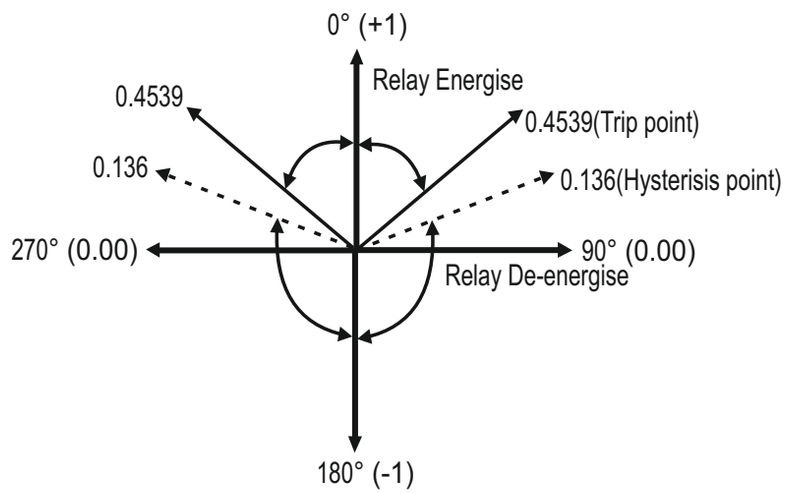

1) Hi alarm & Energised relay

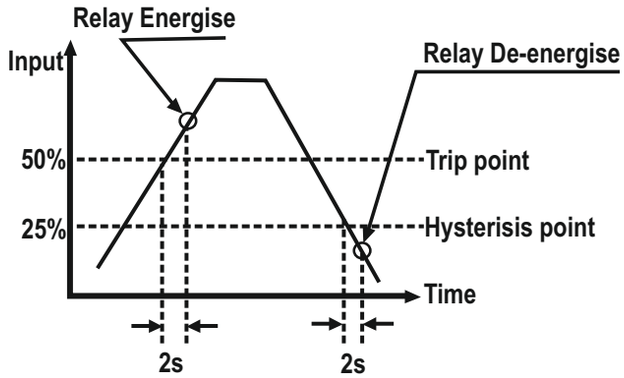

2) Hi alarm & De-energise relay

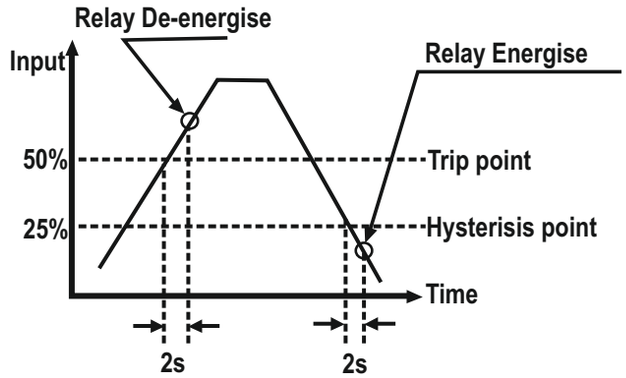

3) Lo alarm & Energised relay

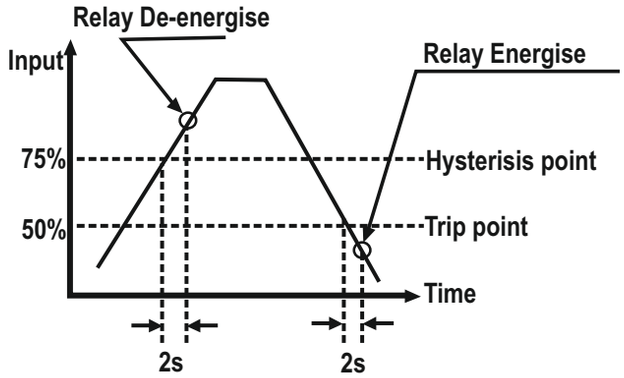

4) Lo alarm & De-energise relay

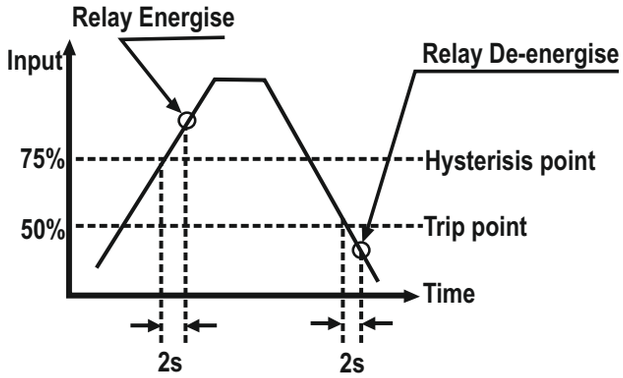

9. RS 485 (ModBus) Output (Optional)

The multifunction meter supports MODBUS (RS485) RTU protocol (2-wire) .

Connection should be made using twisted pair shielded cable. All "A" and "B" connections are daisy chained together. The screens should also be connected to the “Gnd” terminal. To avoid the possibility of loop currents, an Earth connection should be made at one point on the network. Loop (ring) topology does not require any termination load. Line topology may or may not require terminating loads depending on the type and length of cable used. The impedance of the termination load should match the impedance of the cable and be at both ends of the line. The cable should be terminated at each end with a 120 ohm (1/4 Watt min.) resistor.

RS 485 network supports maximum length of 1.2km. Including the Master, a maximum of 32 instruments can be connected in RS485 network. The permissible address range for the multifunction meter is between 1 and 247 for 32 instruments. Broadcast Mode (address 0) is not allowed.

The maximum latency time of an multifunction meter is 200ms i.e. this is the amount of time that can pass before the first response character is output.

After sending any query through software (Master), it must allow 200ms of time to elapse before assuming that the multifunction meter is not going to respond. If slave does not respond within 200 ms, master can ignore the previous query and can issue fresh query to the slave.

The each byte in RTU mode has following format:

	8-bit binary, hexadecimal 0-9, A-F 2 hexadecimal characters contained in each 8-bit field of the message
Format of Data Bytes	4 bytes (32 bits) per parameter. Floating point format (to IEEE 754) Most significant byte first (Alternative least significant byte first)
Error Checking Bytes	2 byte Cyclical Redundancy Check (CRC)
Byte format	1 start bit, 8 data bits, least significant bit sent first 1 bit for even/odd parity 1 stop bit if parity is used; 1 or 2 bits if no parity

Communication Baud Rate is user selectable from the front panel between 4800,9600,19200,38400,57600 bps.

Function code :

03	Read Holding Registers	Read content of read /write location (4X)
04	Read input Registers	Read content of read only location (3X)
16	Presets Multiple Registers	Set the content of read / write locations (4X)

Exception Cases : An exception code will be generated when meter receives ModBus query with valid parity & error check but which contains some other error (e.g. Attempt to set floating point variable to an invalid value) The response generated will be “Function code” Red with HEX (80H). The exception codes are listed below.

01	Illegal function	The function code is not supported by Meter
02	Illegal Data Address	Attempt to access an invalid address or an attempt to read or write part of a floating point value
03	Illegal Data Value	Attempt to set a floating point variable to an invalid value

Accessing 3 X register for reading measured values

Two consecutive 16 bit registers represent one parameter. Refer table 4 for the addresses of 3X registers (Parameters measured by the instruments). Each parameter is held in the 3X registers. Modbus Code 04 is used to access all parameters.

Example :

To read parameter ,

Volts 3 : Start address= 04 (Hex) Number of registers = 02

Note : Number of registers = Number of parameters x 2

Each Query for reading the data must be restricted to 40 parameters or less. Exceeding the 40 parameter limit will cause a ModBus exception code to be returned.

Query :

01 (Hex)	04 (Hex)	00 (Hex)	04(Hex)	00 (Hex)	02(Hex)	30 (Hex)	0A (Hex)
Device Address	Function Code	Start Address High	Start Address Low	Number of Registers Hi	Number of Registers Lo	CRC Low	CRC High

Start Address High : Most significant 8 bits of starting address of the parameter requested.
Start Address low :Least significant 8 bits of starting address of the parameter requested.
Number of register Hi : Most significant 8 bits of number of registers requested.
Number of register Lo : Least significant 8 bits of number of registers requested.
(Note : Two consecutive 16 bit register represent one parameter.)

Response: Volt3 (219.25V)

01 (Hex)	04 (Hex)	04 (Hex)	43 (Hex)	5B (Hex)	41 (Hex)	21 (Hex)	6F (Hex)	9B (Hex)
Device Address	Function Code	Byte Count	Data Register1 High Byte	Data Register1 Low Byte	Data Register2 High Byte	Data Register2 Low Byte	CRC Low	CRC High

Byte Count : Total number of data bytes received.
Data register 1 High Byte : Most significant 8 bits of data register 1 of the parameter requested.
Data register 1 Low Byte : Least significant 8 bits of data register 1 of the parameter requested.
Data register 2 High Byte : Most significant 8 bits of data register 2 of the parameter requested.
Data register 2 Low Byte : Least significant 8 bits of data register 2 of the parameter requested.
(Note : Two consecutive 16 bit register represent one parameter.)

Table 3 : 3 X Register Addresses (Measured Parameters)

Modbus 3X Add.	Modbus 4X Add.	Read only parameter value	3P4W	3P3W	1P3W	1P2W
30001	40001	V1	✓	✓	✓	✓
30003	40003	V2	✓	✓	✓	×
30005	40005	V3	✓	✓	×	×
30007	40007	I1	✓	✓	✓	✓
30009	40009	I2	✓	✓	✓	×
30011	40011	I3	✓	✓	×	×
30031	40031	PF1	✓	×	✓	✓
30033	40033	PF2	✓	×	✓	×
30035	40035	PF3	✓	×	×	×

Table 3 : Continued

Modbus 3X Add.	Modbus 4X Add.	Read only parameter value	3P4W	3P3W	1P3W	1P2W
30043	40043	Volt Avg	✓	✓	✓	✓
30045	40045	Volt Sum	✓	✓	✓	×
30047	40047	Current Avg	✓	✓	✓	✓
30049	40049	Current Sum	✓	✓	✓	×
30063	40063	PF Avg	✓	✓	✓	✓
30065	40065	PF Sum	✓	×	✓	×
30071	40071	System Frequency	✓	✓	✓	✓
30137	40137	System Voltage Max	✓	✓	✓	✓
30139	40139	System Voltage Min	✓	✓	✓	✓
30141	40141	RPM	✓	✓	✓	✓
30143	40143	Impulse Rate	✓	✓	✓	✓
30145	40145	System Current Max	✓	✓	✓	✓
30147	40147	System Current Min	✓	✓	✓	✓
30201	40201	V12	✓	×	×	×
30203	40203	V23	✓	×	×	×
30205	40205	V31	✓	×	×	×
30225	402254	Neutral Current	✓	×	×	×
30227	40227	Run hour	✓	✓	✓	✓
30229	40229	On Hour	✓	✓	✓	✓
30231	40231	No. of interrupts	✓	✓	✓	✓
30243	40243	No. of interrupts	✓	✓	✓	✓
30263	40263	Relay 1 Status	✓	✓	✓	✓
31301	41301	Max Voltage L1	✓	✓	✓	✓
31303	41303	Max Voltage L2	✓	✓	✓	×
31305	41305	Max Voltage L3	✓	✓	×	×
31307	41307	Min Voltage L1	✓	✓	✓	✓
31309	41309	Min Voltage L2	✓	✓	✓	×
31311	41311	Min Voltage L3	✓	✓	×	×
31313	41313	Max Voltage L12	✓	×	✓	×
31315	41315	Max Voltage L23	✓	×	×	×
31317	41317	Max Voltage L31	✓	×	×	×
31319	41319	Min Voltage L12	✓	×	✓	×
31321	41321	Min Voltage L23	✓	×	×	×
31323	41323	Min Voltage L31	✓	×	×	×
31325	41325	System Max Voltage	✓	✓	✓	✓
31327	41327	System Min Voltage	✓	✓	✓	✓

Table 3 : Continued

Modbus 3X Add.	Modbus 4X Add.	Read only parameter value	3P4W	3P3W	1P3W	1P2W
31333	41333	Max Current L1	✓	✓	✓	✓
31335	41335	Max Current L2	✓	✓	✓	×
31337	41337	Max Current L3	✓	✓	×	×
31339	41339	Min Current L1	✓	✓	✓	✓
31341	41341	Min Current L2	✓	✓	✓	×
31343	41343	Min Current L3	✓	✓	×	×
31345	41345	System Max Current	✓	✓	✓	✓
31347	41347	System Min Current	✓	✓	✓	✓
31397	41397	Max PF1	✓	×	✓	✓
31399	41399	Max PF2	✓	×	✓	×
31401	41401	Max PF3	✓	×	×	×
31403	41403	Min PF1	✓	×	✓	✓
31405	41405	Min PF2	✓	×	✓	×
31407	41407	Min PF3	✓	×	×	×
31409	41409	Max SysPF	✓	✓	✓	✓
31411	41411	Min Sys PF	✓	✓	✓	✓
31413	41413	Max neutral current	✓	×	✓	✓
31431	41431	Max Sys Freq	✓	✓	✓	✓
31433	41433	Min Sys Freq	✓	✓	✓	✓

Note : Parameters 1, 2, 3 are L-N Voltage for 3P4W, 1P3W, 1P2W and L-L Voltage for 3P3W.

Accessing 4 X register for Reading & Writing

Each setting is held in the 4X registers. ModBus code 03 is used to read the current setting & code 16 is used to write/change the setting. Refer **Table 5** for 4 X Register addresses.

Example : Reading System type
System type : Start address= 1772 (Hex)
Number of registers = 02
Note :Number of registers = Number of parameters x 2

Query

Device Address	01 (Hex)
Function Code	03 (Hex)
Start Address High	17 (Hex)
Start Address Low	72 (Hex)
Number of Registers Hi	00 (Hex)
Number of Registers Lo	02 (Hex)
CRC Low	EE (Hex)
CRC High	27 (Hex)

Start Address High : Most significant 8 bits of starting address of the parameter requested.
Start Address low : Least significant 8 bits of starting address of the parameter requested.
Number of register Hi : Most significant 8 bits of Number of registers requested.
Number of register Lo : Least significant 8 bits of Number of registers requested.
(Note : Two consecutive 16 bit register represent one parameter.)

Response: System Type (3 phase 4 wire = 3)

Device Address	01 (Hex)
Function Code	03 (Hex)
Byte Count	04 (Hex)
Data Register1 High Byte	40 (Hex)
Data Register1Low Byte	40 (Hex)
Data Register2 High Byte	00 (Hex)
Data Register2 Low Byte	00(Hex)
CRC Low	EE (Hex)
CRC High	27 (Hex)

Byte Count : Total number of data bytes received.
Data register 1 High Byte : Most significant 8 bits of Data register 1 of the parameter requested.
Data register 1 Low Byte : Least significant 8 bits of Data register 1 of the parameter requested.
Data register 2 High Byte : Most significant 8 bits of Data register 2 of the parameter requested.
Data register 2 Low Byte : Least significant 8 bits of Data register 2 of the parameter requested.
(Note : Two consecutive 16 bit register represent one parameter.)

Example : Writing System type

System type : Start address= 1772 (Hex)
Number of registers = 02

Query:(Change System type to 3P3W = 2)

Device Address	01 (Hex)
Function Code	10 (Hex)
Starting Address Hi	17 (Hex)
Starting Address Lo	72(Hex)
Number of Registers Hi	00 (Hex)
Number of Registers Lo	02(Hex)
Byte Count	04 (Hex)
Data Register-1High Byte	40 (Hex)
Data Register-1 Low Byte	00(Hex)
Data Register-2 High Byte	00(Hex)
Data Register-2 Low Byte	00(Hex)
CRC Low	66 (Hex)
CRC High	10 (Hex)

Byte Count : Total number of data bytes received.
Data register 1 high byte : Most significant 8 bits of data register 1 of the parameter requested.
Data register 1 low byte : Least significant 8 bits of data register 1 of the parameter requested.
Data register 2 high byte : Most significant 8 bits of data register 2 of the parameter requested.
Data register 2 Low Byte : Least significant 8 bits of data register 2 of the parameter requested.
(Note : Two consecutive 16 bit register represent one parameter.)

Response:

Device Address	01 (Hex)
Function Code	10 (Hex)
Start Address High	17 (Hex)
Start Address Low	72(Hex)
Number of Registers Hi	00 (Hex)
Number of Registers Lo	02(Hex)
CRC Low	61 (Hex)
CRC High	CA (Hex)

Start address high : Most significant 8 bits of starting address of the parameter requested.
Start address low : Least significant 8 bits of starting address of the parameter requested.
Number of register hi : Most significant 8 bits of number of registers requested.
Number of register lo : Least significant 8 bits of number of registers requested.
(Note : Two consecutive 16 bit register represent one parameter.)

Table 4 : 4 X register addresses

Address	Description	Default Values	Setting Range
46003	System Type	3	1: 1P2W, 2: 3P3W, 3: 3P4W, 4: 1P3W
46005	PT Primary	415	100 to 1200KVLL
46007	CT Primary	5	1 to 9999
46009	PT Secondary	415	100 to 500 VLL
46011	CT Secondary	5	1 or 5
46015	-	-	
46031	Reset Parameters	0	0 to 7
46033	Password	0	0000 to 9999
46035	Factory Reset	0	5555
46039	No Of Poles	2	2 to 40 (multiples of 2 only)
46041	Autoscroll	0	0 or 1
46043	Noise Cutoff	0	0mA or 30mA
46045	Comsetup	8	4 to 23
46047	Modbus Address	1	1 to 247
46049	Register Order	0	2141
46055	Relay 1 Out Select	0	0 for NONE, 2 for Limit
46059	Limit 1 Conf Sel	0	0: Hi-En, 1: Hi-DEn, 2: Lo-En. 3: Lo-DEn
46061	Limit 1 Trip Point	100	See Table 4
46063	Limit 1 Hysteresis	50	0.5% to 50%
46065	Limit 1 On Delay	1	1 to 10
46067	Limit 1 Off Delay	1	1 to 10
46085	Version No.		

Explanation for 4 X register

Address	Parameters	Description
46003	System Type	This address is used to set the System Type. Write one of the following value to this address. 1 =1 Phase 2 Wire 4=1 Phase 3 Wire 2 = 3 Phase 3 Wire 3 = 3 Phase 4 Wire Writing any other value will return error.
46005	PT Primary	This address allows the user to set PT Primary value. The maximum settable value is 1200kVL-L for all System Types & also depends on the per phase 1000MVA restriction of power combined with CT primary.
46007	CT Primary	This address allows the user to set CT Primary value. The maximum settable value is 9999 & also depends on the per phase 1000MVA Restriction of power combined with PT primary
46009	PT Secondary	This address is used to read and write the PT secondary value. Ref Table for the range of PT secondary settable values in Section 3.2.1.3
46011	CT Secondary	This address is used to read and write the CT secondary value. write one of the following values to this address. 1=1A CT secondary 5=5A CT secondary writing any other value will return an error.
46015	-	
46031	Reset Parameters	The following screens allow the users to reset the all 1.Lo(Min), 2.hi(Max) ,4.Run hour, 5.On hour, 6.Number of Interrupts, 7.Reset ALL
46033	Password	This address is used to set & reset the password. Valid Range of Password can be set is 0000 - 9999 . 1) If password lock is present & if this location is read it will return zero. 2) If Password lock is absent & if this location is read it will return One. 3) If password lock is present & to disable this lock first send valid password to this location then write “0000” to this location 4) If password lock is present & to modify 4X parameter first send valid password to this location so that 4X parameter will be accessible for modification. 5) If for in any of the above case invalid password is send then meter will return exceptional error 2.
46035	Factory Reset	sending 5555 to this address will Reset meter to factory defalts.

46039	No Of Poles	Enables to set No. of poles of a Generator of which RPM is to be measured and to which the instrument is connected to monitor its parameters. setting range is 2 to 40 (multiples of 2 only)
46041	Autoscroll	This address is used to activate or de-activatethe auto scrolling. Write 0-Deactivate 1-Activate, Writing any other value will return an error.
46043	Noise Cutoff	This address is used to set the noise current cutoff. The valid values are 0 OR 30 (mA).
46045	Comsetup	This address is used to set the baud rate, Parity, Number of stop bits. Refer to Table 6 for details.
46047	Modbus Address	This register address is used to set Device address between 1 to 247 .
46049	Word Order	Word Order controls the order in which Multifunction Meter receives or sends floating - point numbers:- normal or reversed register order . In normal mode, the two registers that make up a floating point numbers are sent most significant bytes first. In reversed register mode , the two registers that make up a floating point numbers are sent least significant bytes first. To set the mode, write the value '2141.0' into this register-the instrument will detect the order used to send this value and set that order for all ModBus transaction involving floating point numbers.
46055	Relay 1 Out Select	This address is used to select the Relay operation as pulse or Limit. write one of the following values to this address. 0=None,2= Limit output on Relay. Writing any other value will return an error
46057	Limit 1 Para Sel	This address is used to assign the Parameter to Relay If Limit option is selected refer table 2 for parameter number.
46059	Limit 1 Configuration Sel	This address is used to set the Configuration for relay see table 8. Writting any other value will return an error.
46061	Limit 1 Trip Point	This address is used to set the trip point in %. Tje values for high and low alarm can be refered from Table 2. Writing any other value will return an error.
46063	Limit 1 Hysteresis	This address is used to set the hysteresis between 0 to 50 . Writing any other value will return an error.
46065	Limit 1 On Delay	This address is used to set the Energizing delay between 1 to 10 . Writing any other value will return an error.

46067	Limit 1 Off Delay	This address is used to set the De-Energizing delay between 1 to 10 . Writing any other value will return an error.
46085	Version No.	This Address shows The firmware version of device

Table 5: RS 485 Set-up Code

Baud Rate	Parity	Stop bit	Decimal Value
4800	NONE	1	4
4800	NONE	2	5
4800	EVEN	1	6
4800	ODD	1	7
9600	NONE	1	8
9600	NONE	2	9
9600	EVEN	1	10
9600	ODD	1	11
19200	NONE	1	12
19200	NONE	2	13
19200	EVEN	1	14
19200	ODD	1	15
38400	NONE	1	16
38400	NONE	2	17
38400	EVEN	1	18
38400	ODD	1	19
57600	NONE	1	20
57600	NONE	2	21
57600	EVEN	1	22
57600	ODD	1	23

NOTE : Codes not listed in the table above may give rise to unpredictable results including loss of communication. Exercise caution when attempting to change mode via direct Modbus writes.

Table 6: Limit Configuration Select

Code	Configuration
0	Hi- alarm & Energized relay
1	Hi- alarm & De-energized relay
2	Lo- alarm & Energized relay
3	Lo- alarm & De-energized relay

9.1 User Assignable Modbus Registers

The Multifunction Meter contains the 20 user assignable registers in the address range of 0x1450 (35201) to 0x1476 (35239) (**See Table 10**).

Any of the parameter addresses (3X register addresses Table 4) accessible in the instrument can be mapped to these 20 user assignable registers.

Parameters (3X registers addresses) that resides in different locations may be accessed by the single request by re-mapping them to adjacent address in the user assignable registers area.

The actual address of the parameters (3X registers addresses) which are to be assessed via address 0x1450 to 0x1476 are specified in 4X Register 0x157D to 0x1590 (**See Table 11**).

Table 7 : User Assignable 3X & 4X Data Registers

Address (3X)	Address (4X)	Assignable Register	Modbus Start Address (Hex)	
			High Byte	Low Byte
35201	45201	Assignable Register 1	14	50
35203	45203	Assignable Register 2	14	52
35205	45205	Assignable Register 3	14	54
35207	45207	Assignable Register 4	14	56
35209	45209	Assignable Register 5	14	58
35211	45211	Assignable Register 6	14	5A
35213	45213	Assignable Register 7	14	5C
35215	45215	Assignable Register 8	14	5E
35217	45217	Assignable Register 9	14	60
35219	45219	Assignable Register 10	14	62
35221	45221	Assignable Register 11	14	64
35223	45223	Assignable Register 12	14	66
35225	45225	Assignable Register 13	14	68
35227	45227	Assignable Register 14	14	6A
35229	45229	Assignable Register 15	14	6C
35231	45231	Assignable Register 16	14	6E
35233	45233	Assignable Register 17	14	70
35235	45235	Assignable Register 18	14	72
35237	45237	Assignable Register 19	14	74
35239	45239	Assignable Register 20	14	76

Table 8 : User Assignable mapping register (4X registers)

Address (4X)	Assignable Register	Modbus Start Address (Hex)	
		High Byte	Low Byte
405501	Map Address for Assignable Register 1	15	7D
405502	Map Address for Assignable Register 2	15	7E
405503	Map Address for Assignable Register 3	15	7F
405504	Map Address for Assignable Register 4	15	80
405505	Map Address for Assignable Register 5	15	81
405506	Map Address for Assignable Register 6	15	82
4055007	Map Address for Assignable Register 7	15	83
405508	Map Address for Assignable Register 8	15	84
405509	Map Address for Assignable Register 9	15	85
405510	Map Address for Assignable Register 10	15	86
405511	Map Address for Assignable Register 11	15	87
405512	Map Address for Assignable Register 12	15	88
405513	Map Address for Assignable Register 13	15	89
405514	Map Address for Assignable Register 14	15	8A
405515	Map Address for Assignable Register 15	15	8B
405516	Map Address for Assignable Register 16	15	8C
405517	Map Address for Assignable Register 17	15	8D
405518	Map Address for Assignable Register 18	15	8E
405519	Map Address for Assignable Register 19	15	8F
405520	Map Address for Assignable Register 20	15	90

Example : Assigning parameter to user assignable registers
To access the voltage2 (3X address 0x0002) and power factor1 (3X address 0x001E) through user assignable register assign these addresses to 4x register (Table 11) 0x157D and 0x157E respectively .

Assigning Query:

Device Address	01 (Hex)
Function Code	10 (Hex)
Starting Address Hi	15 (Hex)
Starting Address Lo	7D (Hex)
Number of Registers Hi	00 (Hex)*
Number of Registers Lo	02 (Hex)*
Byte Count	04 (Hex)

Data Register-1High Byte	00 (Hex)	Voltage 2 * (3X Address 0x0002)
Data Register-1 Low Byte	02 (Hex)	
Data Register-2 High Byte	00 (Hex)	Power Factor 1 *(3X Address 0x001E)
Data Register-2 Low Byte	1E (Hex)	
CRC Low	E6(Hex)	
CRC High	4A (Hex)	

* Note : Parameters should be assigned in Multiple of two i.e. 2,4,6,8.....20.

Response :

Device Address	01 (Hex)
Function Code	10 (Hex)
Start Address High	15 (Hex)
Start Address Low	7D (Hex)
Number of Registers Hi	00 (Hex)
Number of Registers Lo	02 (Hex)
CRC Low	D5 (Hex)
CRC High	DC (Hex)

Reading parameter data through user assignable registers:
In assigning query voltage 2 & power factor 1 parameters were assigned to 0x 157D & 0x157E(Table11) which will point to user assignable 3xregisters 0x1450 and 0x1452 (table10). So to read voltage2 and power factor1 data reading query should be as below.

Query:

Device Address	01 (Hex)
Function Code	04 (Hex)
Start Address High	14 (Hex)
Start Address Low	50 (Hex)
Number of Registers Hi	00 (Hex)
Number of Registers Lo	04 (Hex)**
CRC Low	F0 (Hex)
CRC High	71 (Hex)

Start address high : Most significant 8 bits of starting address of user assignable register.
Start address low :Least significant 8 bits of starting address of user assignable register.

Number of register Hi : Most significant 8 bits of number of registers requested.
Number of register Lo : Least significant 8 bits of number of registers requested.

****Note : Two consecutive 16 bit register represent one parameter.**
Since two parameters are requested four registers are required

Response : (Volt2 = 219.30 / Power Factor1 = 1.0)

Device Address	01 (Hex)	
Function Code	04 (Hex)	
Byte count	08 (Hex)	
Data Register-1 High Byte	43 (Hex)	**Voltage 2 Data**
Data Register-1 Low Byte	5B (Hex)	
Data Register-2 High Byte	4E (Hex)	
Data Register-2 Low Byte	04 (Hex)	
Data Register-3 High Byte	3F (Hex)	**Power Factor 1 Data**
Data Register-3 Low Byte	80 (Hex)	
Data Register-4 High Byte	00 (Hex)	
Data Register-4 Low Byte	00 (Hex)	
CRC Low	79 (Hex)	
CRC High	3F (Hex)	

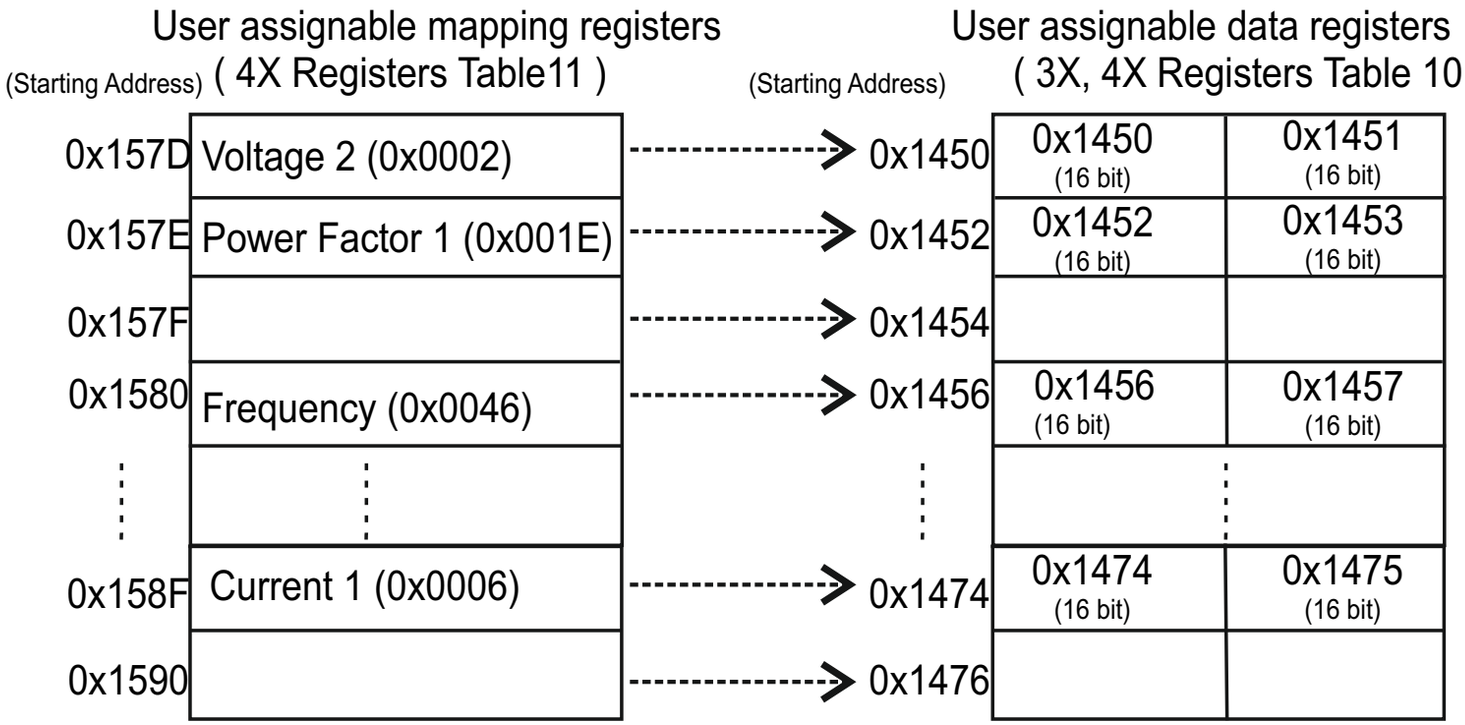

To get the data through user assignable register use following steps:

1) Assign starting addresses (Table3) of parameters of interest to a "User assignable mapping registers" in a sequence in which they are to be accessed (see section "**Assigning parameter to user assignable registers"**)
2) Once the parameters are mapped data can be acquired by using "User assignable data register" Starting address . i.e to access data of Voltage2, Power factor1, Frequency send query with starting address 0x1450 with number of register 8 or individually parameters can be accessed for example if current1 to be accessed use starting address 0x1474 (See section **Reading parameter data through User assignable registers)**

10. Phasor Diagram :

Quadrant 1: 0° to 90°
Quadrant 2: 90° to 180°
Quadrant 3: 180° to 270°
Quadrant 4: 270° to 360°

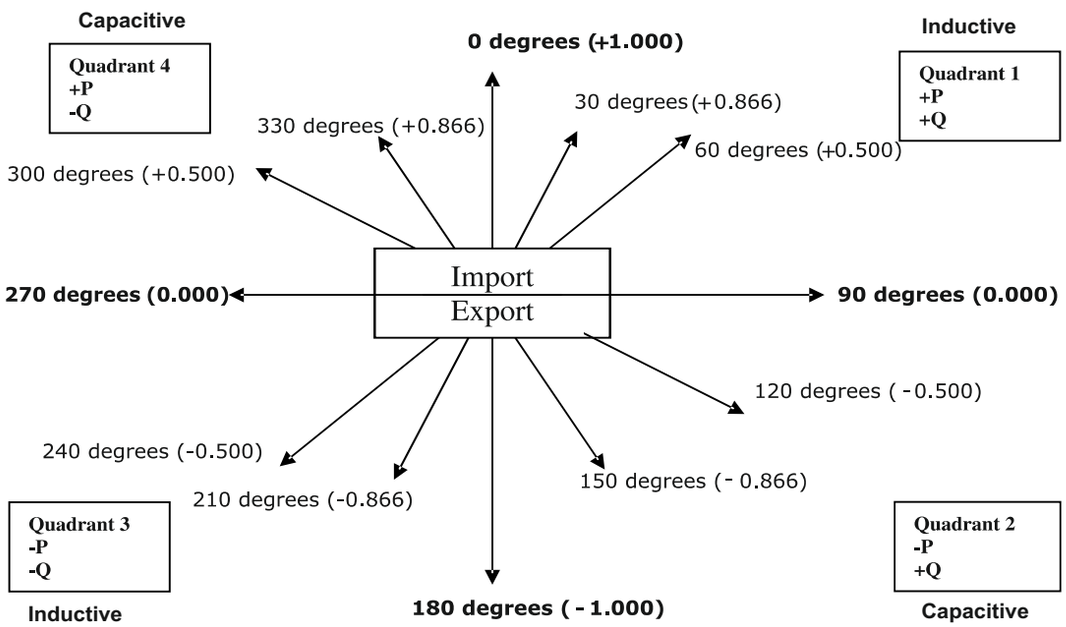

11. Installation

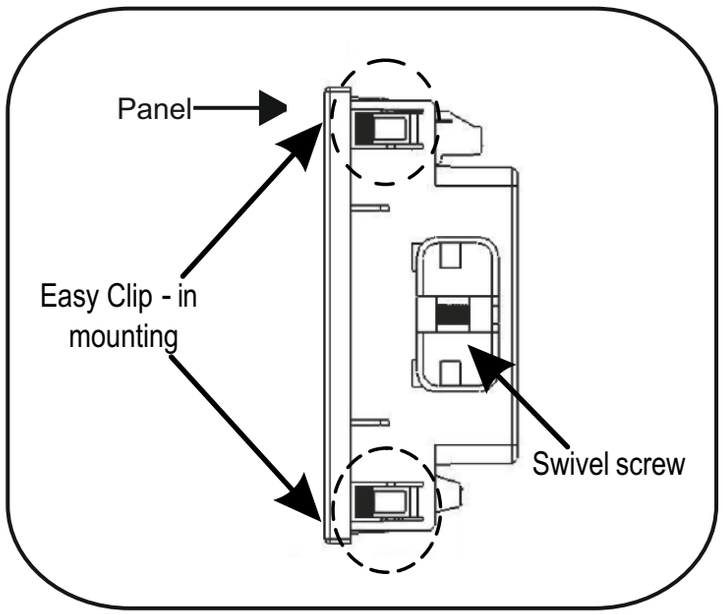

Panel Thickness : 1 - 3mm for self clicking,
1 - 6mm for swivel screws

Caution

In the interest of safety and functionality this
1. **product must be installed by a qualified engineer, abiding by any local regulations.**
2. **Voltages dangerous to human life are present at some of the terminal connections of this unit. Ensure that all supplies are de-energised before attempting any connection or disconnection. These products do not have internal fuses therefore external fuses must be used to ensure safety under fault conditions.**

Mounting of multifunction meter is featured with easy “Clip- in” mounting. push the meter in panel slot (size 92 x92 mm), it will click fit into panel with the four integral retention clips on two sides of meter. If required Additional support is provided with swivel screws as shown in figure.
The front of the enclosure conforms to IP50. Additional protection to the panel may be obtained by the use of an Optional panel gasket. The terminals at the rear of the product should be protected from liquids.

The multifunction meter should be mounted in a reasonably stable ambient temperature and where the operating temperature is within specified limit. Vibration should be kept to a minimum and the product should not be mounted where it will be subjected to excessive direct sunlight.

11.1 EMC Installation Requirements

This product has been designed to meet the certification of the EU directives when installed to a good code of practice for EMC in industrial environments,e.g.

1. Screened output and low signal input leads or have provision for fitting RF suppression components,such as ferrite absorbers, line filters etc., in the event that RF fields cause problems.

Note: It is good practice to install sensitive electronic instruments that are performing critical functions, in EMC enclosures that protect against electrical interference which could cause a disturbance in function.

2. Avoid routing leads alongside cables and products that are, or could be, a source of interference.

3. To protect the product against permanent damage, surge transients must be limited to 2kV pk. It is good EMC practice to suppress differential surges to 2kV at the source. The unit has been designed to automatically recover in the event of a high level of transients. In extreme circumstances it may be necessary to temporarily disconnect the auxiliary supply for a period of greater than 5 seconds to restore correct operation. The Current inputs of these products are designed for connection in to systems via Current Transformers only, where one side is grounded.

4. ESD precautions must be taken at all times when handling this product.

11.2 Case Dimension & Panel Cut Out

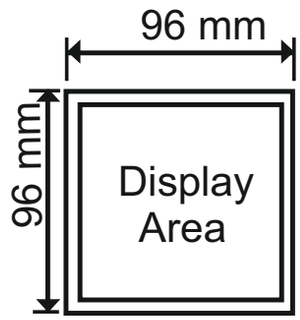

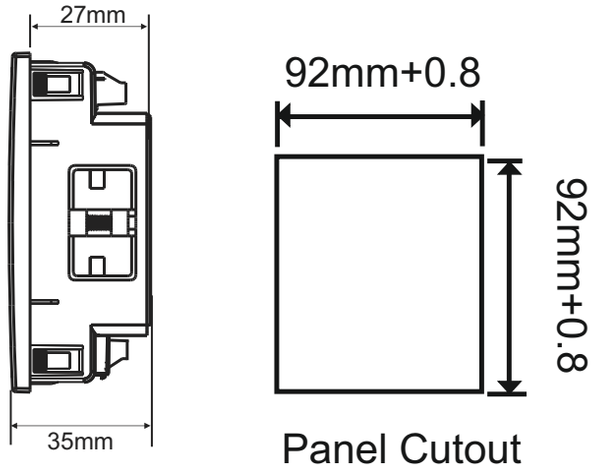

Panel Cutout

11.3 Wiring

Input connections are made directly to screw-type terminals with indirect wire pressure. numbering is clearly marked on the connector. Choice of cable should meet local regulations. terminal for both current and voltage inputs will accept upto $4mm^2$ (12AWG) solid or 2.5 mm^2 stranded cable.

Note : It is recommended to use wire with lug for connection with meter.

11.4 Auxiliary Supply

Meter should ideally be powered from a dedicated supply, however powered from the signal source, provided the source remains within it may be the limits of the chosen auxiliary voltage range.

11.5 Fusing

It is recommended that all voltage lines are fitted with 1 amp HRC fuse.

11.6 Earth/Ground Connections

For safety reasons, CT secondary connections should be grounded in accordance with local regulations.

12. Connection Diagrams

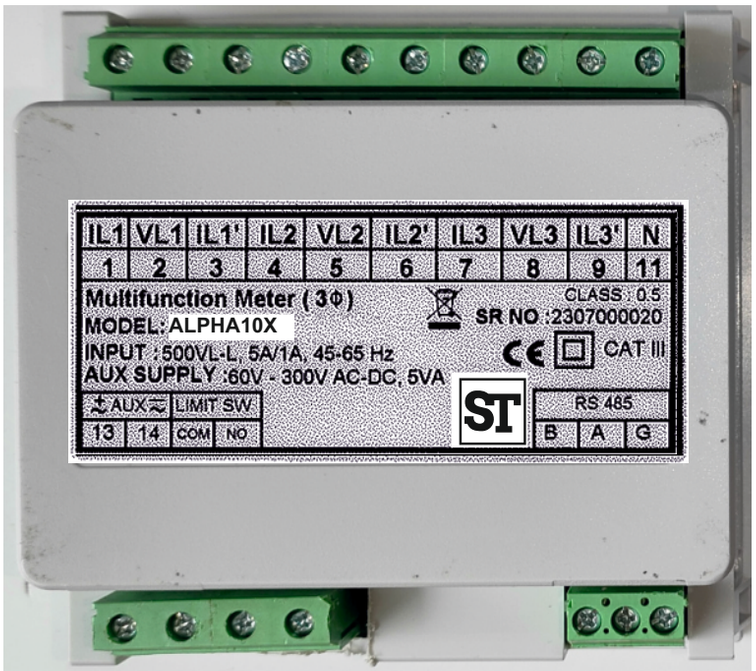

3P4W UNBALANCED LOAD
DIGITAL METERING SYSTEM

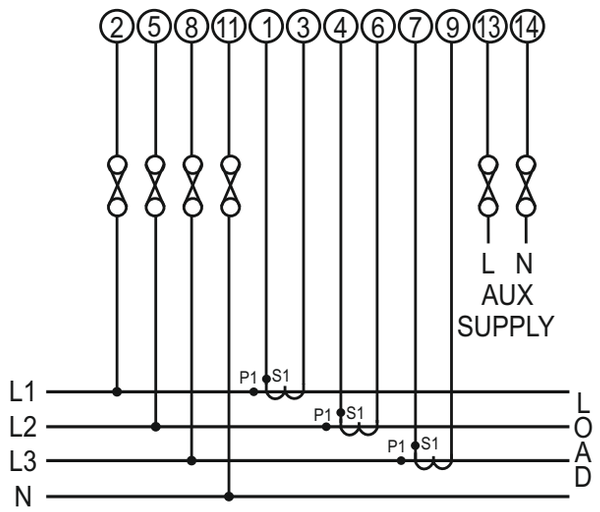

1P2W
DIGITAL METERING SYSTEM

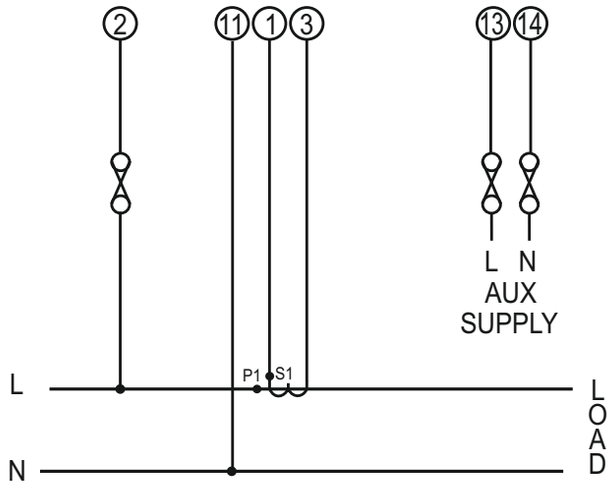

3P3W UNBALANCED LOAD
DIGITAL METERING SYSTEM

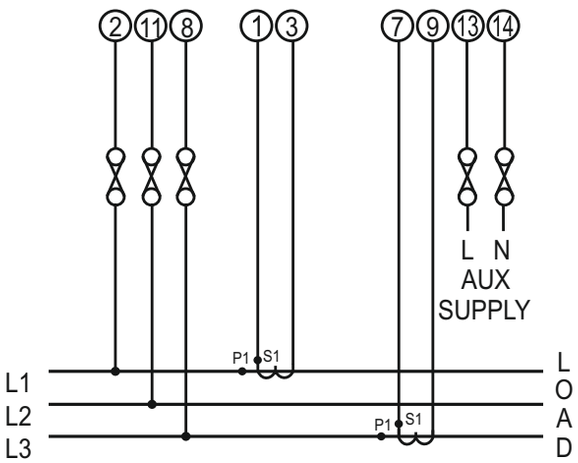

1P3W
DIGITAL METERING SYSTEM

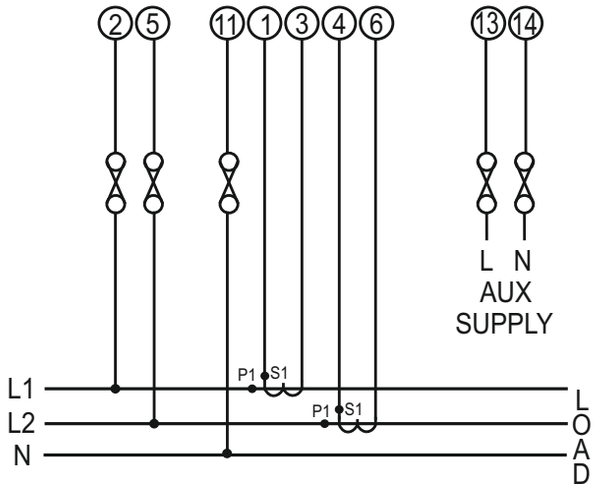

13. Specification

System	3P3W, 3P4W, 1P3W And 1P2W programmable at site
Nominal Input Voltage (AC RMS)	288.68VLN (500VLL)
System PT Primary Values	100 VLL to 1200 VLL programmable on site (1000 MVA maximum power) (1200 kVLL when CT Primary <= 1002 A)
System PT Secondary Values	100 VLL to 500 VLL programmable on site
Maximum Continuous Input Voltage	120% of nominal value
Nominal input voltage burden	<0.3VA approx. per Phase (At nominal 240V)
Nominal Input Current (AC RMS)	5A / 1A AC RMS progrmmable on site
System CT primary values	1 - 9999 A programmable on site (1000 MVA maximum power) (9999 A when PT primary <= 120 kVLL)
Maximum Continuous Input Current	120 (200 On request) % of nominal values
Nominal Input Current Burden	<0.3VA approx. per phase (at 5A)
Overload withstand	
Voltage input	2X rated value for 1 second, repeated 10 times in 10 second intervals
Current input	20X rated value for 1 (3 On request) second, repeated 5 times in 5 minute intervals
Auxiliary Supply	
Higher Auxillary Supply	60V to 300V AC/DC (230 V nominal)
Frequency Range	45 to 65 Hz
Lower Auxillary Supply	20-60 V AC/DC
VA Burden	<4 VA Approx (230 V nominal).
Operating Measuring Ranges	
Voltage	20 - 120% of nominal voltage
Current	5 - 120 (200 On request) % of nominal voltage
Frequency	40 - 70 Hz
Power Factor	0.5 Lead, 1, 0.5 Lag

Reference conditions for Accuracy

Reference Temperature	23 °C ± 2 °C
Input frequency	50 or 60Hz ± 2%
Input waveform	Sinusoidal (distortion factor 0.005)
Voltage Range	40 - 120 % of nominal value
Current Range	10 - 120 (200 On request) % of nominal value
Input Frequency	50/60 Hz ± 2 %
Power Factor	40 - 120 % of nominal value of voltage
	40 - 120 (200 On request) % of nominal value of Current

Accuracy

Voltage	± 0.5 % of nominal value
Current	± 0.5 % of nominal value
Frequency	± 0.1 % of mid frequency
Power Factor/ Phase angle	± 2

Influence of Variations

Temperature Coefficient	0.05% / °C for Current 0.025% / °C for Voltage (For Rated Value Range of use is 0 to 50 °C)
Error Change due to variation of an influence quantity	2 * Error allowed for the reference condition applied in the test

Display

L E D	3 Line 4 Digit, Display Height - 14 mm
Annunciation of units	Bright LED indication
Update Rate	Approx. 1 second

Controls

User Interface	2 Buttons

Standards

EMC immunity	IEC 61326-1, Table 2.
Immunity	IEC 61000-4-2, 4-3, 4-4, 4-5, 4-6, 4-8, 4-11
Safety	IEC 61010-1:2017

IP for Water and Dust	IEC 60529
Pollution Degree	2
Installation Category	III
Emission	CISPR 11

Isolation

High Voltage Test	
All Circuit vs Surface	3.5 kV RMS, 50Hz, 1min
Input/AUX vs Others	3.5 kV RMS, 50Hz, 1min
Relay/RS485 vs Others	3.3 kV RMS, 50Hz, 1min
Input voltage vs Input Current	2.2 kV RMS, 50Hz, 1 min
Input vs AUX	3.3 kV RMS, 50Hz, 1 min
Rs485 vs Relay	2.2 kV RMS, 50Hz, 1 min

Environmental conditions

Operating temperature	0 to +60 ^{0}C
Storage temperature	-25 to +70 ^{0}C (as per IEC 60688)
Relative humidity	0-95% RH (Non condensing)
Warm up time	3 minute (minimum)
Shock	30gn (300 m/s^2), duration 18ms
Vibration	10 .. 150 ..10 Hz, 0.15mm amplitude

Enclosure

Enclosure front	IP 50 (IP 54 On request)
Enclosure back	IP 20

Dimensions

Bezel Size	96mm x 96mm DIN43718
Panel cut out	$92^{+0.8}$mm X $92^{+0.8}$mm
Overall Depth	55 mm
Panel thickness	1 - 3mm for self clicking, 1 - 6mm for swivel screws
Weight	250 grams Approx.

Relay output Option

Relay	1CO
Switching Voltage & Current	250VAC, 5Amp ; 30VDC, 5Amp

ModBus (RS 485) Option :

Protocol	ModBus (RS 485)
Baud Rate	4.8k 9.6k, 19.2k, 38.4k, 57.6k (Programmable)
Parity	Odd or Even, with1 stop bit, or None with 1 or 2 stop bits

NOTE

The Information contained in these installation instructions is for use only by installers trained to make electrical power installations and is intended to describe the correct method of installation for this product. However, ‘manufacturer’ has no control over the field conditions which influence product installation.
It is the user’s responsibility to determine the suitability of the installation method in the user’s field conditions. ‘manufacturer’ only obligations are responsibility to determine the suitability of the installation method in the user’s field conditions. ‘manufacturer’ only obligations are those in ‘manufacturer’ standard Conditions of Sale for this product and in no case will ‘manufacturer’ be liable for any other incidental, indirect or consequential damages arising

Sifam tinsley
PRECISION INSTRUMENTATION

Sifam Tinsley Instrumentation Inc
2105 Barrett Park Drive,
Unit 105, Kennesaw, GA 30144
Phone/Fax: +1 678 881 0008 x 701
Toll Free: 800 879 6171
Email: info@sifamtinsley.com
Web: www.sifamtinsley.com

Sifam Tinsley Instrumentation Ltd.
Unit 1, Warner Drive,
Springwood Industrial Estate,
CM72YW, Braintree, Essex, UK
Contact Number: +44 (0) 1376335271
Email: sales@sifamtinsley.com
Web: www.sifamtinsley.co.uk